# Priority choice two-qubit tomography

Karol Bartkiewicz

bark@amu.edu.pl

Faculty of Physics, Adam Mickiewicz University in Poznań, Poland

July 8, 2015

# In collaboration with









- Antonín Černoch
- Karel Lemr
- Adam Miranowicz




K. Bartkiewicz, A. Černoch, K. Lemr, A. Miranowicz, arXiv:1506.01317

# Outline of the presentation


1. Introduction
   - Quantum tomography
   - Tomographic stability
2. Error analysis
   - Maximum error
   - Standard error
3. Optimal tomography
   - Theory
   - Experiment
4. Conclusions

# Quantum state tomography




Plato's Allegory of the Cave by Jan Saenredam,
according to Cornelis van Haarlem, 1604, Albertina, Vienna

# Quantum state tomography (QST)

## Applications

Full characterization of physical reality

- quantum states (full information)
- quantum processes
- quantum detectors

## Negativity for mixed two-qubit states

Full QST: 16 measurements
Invariants: 9 fundamental or 6 composite




K. Bartkiewicz, J. Beran, K. Lemr, M. Norek, A. Miranowicz,
Phys. Rev. A **91**, 022323 (2015).




K. Bartkiewicz, P. Horodecki, K. Lemr, A. Miranowicz, K. Życzkowski,
Phys. Rev. A **91**, 032315 (2015).

# Quantum state tomography (QST)

## Applications

Full characterization of physical reality

- quantum states (full information)
- quantum processes
- quantum detectors

## Negativity for mixed two-qubit states

Full QST: 16 measurements
Invariants: 9 fundamental or 6 composite





K. Bartkiewicz, J. Beran, K. Lemr, M. Norek, A. Miranowicz,
Phys. Rev. A **91**, 022323 (2015).




K. Bartkiewicz, P. Horodecki, K. Lemr, A. Miranowicz, K. Życzkowski,
Phys. Rev. A **91**, 032315 (2015).

# Quantum state tomography

## Approaches

- linear inversion
- least-squares inversion
- Bayesian mean estimation
- linear regression estimation

There exists a number of QST protocols and choosing the best one appeared to be not a simple task.




A. Miranowicz, K. Bartkiewicz, J. Peřina Jr., M. Koashi, N. Imoto, F. Nori, Phys. Rev. A **90**, 062123 (2014).

# Quantum state tomography

## Approaches

- linear inversion
- least-squares inversion
- Bayesian mean estimation
- linear regression estimation

There exists a number of QST protocols and choosing the best one appeared to be not a simple task.




A. Miranowicz, K. Bartkiewicz, J. Peřina Jr., M. Koashi, N. Imoto, F. Nori, Phys. Rev. A **90**, 062123 (2014).

# Quantum state tomography

## Two-qubit density matrix $\rho$

is an array of real numbers $x_1, \ldots, x_{16}$ with its elements given as follows

$$\rho(x) = \begin{bmatrix} x_1 & x_2 + ix_3 & x_4 + ix_5 & x_6 + ix_7 \\ x_2 - ix_3 & x_8 & x_9 + ix_{10} & x_{11} + ix_{12} \\ x_4 - ix_5 & x_9 - ix_{10} & x_{13} & x_{14} + ix_{15} \\ x_6 - ix_7 & x_{11} - ix_{12} & x_{14} - ix_{15} & x_{16} \end{bmatrix}$$

Our approach can be generalized to $d$-dimensional states.

# Quantum state tomography

## Two-qubit density matrix $\rho$

is an array of real numbers $x_1, \ldots, x_{16}$ with its elements given as follows

$$\rho(x) = \begin{bmatrix} x_1 & x_2 + ix_3 & x_4 + ix_5 & x_6 + ix_7 \\ x_2 - ix_3 & x_8 & x_9 + ix_{10} & x_{11} + ix_{12} \\ x_4 - ix_5 & x_9 - ix_{10} & x_{13} & x_{14} + ix_{15} \\ x_6 - ix_7 & x_{11} - ix_{12} & x_{14} - ix_{15} & x_{16} \end{bmatrix}$$

Our approach can be generalized to $d$-dimensional states.

# Quantum state tomography

## Linear inversion

$$Ax = b \rightarrow x = A^{-1}b$$

- $A$ is the coefficient matrix
- $b$ is the observation vector
- $x = \mathrm{vec}(\rho) = [\rho_{11}, \mathrm{Re}\rho_{12}, \mathrm{Im}\rho_{12}, \mathrm{Re}\rho_{13}, \mathrm{Im}\rho_{13}, ..., \rho_{44}]^T$ is a real vector describing an unknown state $\rho$

# Tomographic stability

## An example

$$x = A^{-1}b$$

- $A = \begin{bmatrix} 6 & 7 \\ 5 & 6 \end{bmatrix} \rightarrow A^{-1} = \begin{bmatrix} 6 & -7 \\ -5 & 6 \end{bmatrix}$
- $b = [0.7,\ 0.6]^T \quad \rightarrow x = [0, 0.1]^T$
- $b = [0.71,\ 0.59]^T \rightarrow x = [0.13, -0.01]^T$

If $A$ is almost singular, then small deviations in observations $\delta b$ cause large deviations in reconstructed values $\delta x$!

# Tomographic stability

## An example

$$x = A^{-1}b$$

- $A = \begin{bmatrix} 6 & 7 \\ 5 & 6 \end{bmatrix} \rightarrow A^{-1} = \begin{bmatrix} 6 & -7 \\ -5 & 6 \end{bmatrix}$
- $b = [0.7,\ 0.6]^T \quad \rightarrow x = [0, 0.1]^T$
- $b = [0.71,\ 0.59]^T \rightarrow x = [0.13, -0.01]^T$

If $A$ is almost singular, then small deviations in observations $\delta b$ cause large deviations in reconstructed values $\delta x$!

# Tomographic stability

## An example

$$x = A^{-1}b$$

- $A = \begin{bmatrix} 6 & 7 \\ 5 & 6 \end{bmatrix} \rightarrow A^{-1} = \begin{bmatrix} 6 & -7 \\ -5 & 6 \end{bmatrix}$
- $b = [0.7,\ 0.6]^T \quad \rightarrow x = [0, 0.1]^T$
- $b = [0.71,\ 0.59]^T \rightarrow x = [0.13, -0.01]^T$

If $A$ is almost singular, then small deviations in observations $\delta b$ cause large deviations in reconstructed values $\delta x$!

# Tomographic stability

## An example

$$x = A^{-1} b$$

- $A = \begin{bmatrix} 6 & 7 \\ 5 & 6 \end{bmatrix} \rightarrow A^{-1} = \begin{bmatrix} 6 & -7 \\ -5 & 6 \end{bmatrix}$
- $b = [0.7,\ 0.6]^T \quad \rightarrow x = [0, 0.1]^T$
- $b = [0.71,\ 0.59]^T \rightarrow x = [0.13, -0.01]^T$

If $A$ is almost singular, then small deviations in observations $\delta b$ cause large deviations in reconstructed values $\delta x$!

# Tomographic stability

## Gastinel-Kahan theorem

$$\mathrm{dist}_{\alpha,\beta}(A) := \min\left\{ \frac{\|A-P\|_{\alpha,\beta}}{\|A\|_{\alpha,\beta}} \,:\, P \text{ is singular} \right\},$$

$$\mathrm{dist}_{\alpha,\beta}(A) = \frac{1}{\mathrm{cond}_{\alpha,\beta}(A)}.$$




W. Kahan, *Numerical linear algebra*, Canad. Math. Bull. **9**, 757 (1966).

Yu. I. Bogdanov, G. Brida, M. Genovese, S. P. Kulik, E. V. Moreva, and A. P. Shurupov, Phys. Rev. Lett. **105**, 010404 (2010).

# Tomographic stability

## Gastinel-Kahan theorem

$$\mathrm{dist}_{\alpha,\beta}(A) := \min\left\{ \frac{\|A-P\|_{\alpha,\beta}}{\|A\|_{\alpha,\beta}} \,:\, P \text{ is singular} \right\},$$

$$\mathrm{dist}_{\alpha,\beta}(A) = \frac{1}{\mathrm{cond}_{\alpha,\beta}(A)}.$$




W. Kahan, *Numerical linear algebra*, Canad. Math. Bull. **9**, 757 (1966).

Yu. I. Bogdanov, G. Brida, M. Genovese, S. P. Kulik, E. V. Moreva, and A. P. Shurupov, Phys. Rev. Lett. **105**, 010404 (2010).

# Tomographic stability

## Condition number

$$\mathrm{cond}_{\alpha,\beta}(A) = \|A\|_{\alpha,\beta}\ \|A^{-1}\|_{\beta,\alpha}$$

- $\|A\|_{\alpha,\beta} = \max_{x\neq 0} \frac{\|Ax\|_\beta}{\|x\|_\alpha}$
- $\mathrm{cond}_{\alpha,\beta}(A) = +\infty$ for a singular matrix $A$
- $\mathrm{cond}_{\alpha,\beta}(A) \geq 1$




A. M. Turing, *Rounding-off errors in matrix processes*, Quart. J. Mech. Appl. Math. **1**, 287 (1948).

# Tomographic stability

## Spectral norm

$$\|A\|_2 = \max[\mathrm{svd}(A)] \equiv \sigma_{\max}(A)$$

where the function $\mathrm{svd}(A)$ returns the singular values of $A$.

## Singular value decomposition

$$x = A^{-1}b = (VD^{-1}U^T)b = \sum_{i=1}^{n} \frac{u_i^T b}{\bar{\sigma}_i} v_i$$

- $U = [u_1, ..., u_n]$ and $V = [v_1, ..., v_n]$ are the left- and right-hand singular vectors for $A$
- $D = \mathrm{diag}([\bar{\sigma}_1, ..., \bar{\sigma}_n])$ is a diagonal matrix of the singular values $\bar{\sigma}_i$ for $A$

# Tomographic stability

## Spectral norm

$$\|A\|_2 = \max[\mathrm{svd}(A)] \equiv \sigma_{\max}(A)$$

where the function $\mathrm{svd}(A)$ returns the singular values of $A$.

## Singular value decomposition

$$x = A^{-1}b = (VD^{-1}U^T)b = \sum_{i=1}^{n} \frac{u_i^T b}{\bar{\sigma}_i} v_i$$

- $U = [u_1, ..., u_n]$ and $V = [v_1, ..., v_n]$ are the left- and right-hand singular vectors for $A$
- $D = \mathrm{diag}([\bar{\sigma}_1, ..., \bar{\sigma}_n])$ is a diagonal matrix of the singular values $\bar{\sigma}_i$ for $A$

# Tomographic stability

## Condition number $\kappa$

$$\kappa(A) \equiv \mathrm{cond}_2(A) = \frac{\max[\mathrm{svd}(A)]}{\min[\mathrm{svd}(A)]}$$

- $\mathrm{svd}(A)$ returns the singular values of $A$
- $\kappa(A) = 1$ for the optimal tomography

# Tomographic stability

## Condition number $\kappa$

$$\kappa(A) \equiv \mathrm{cond}_2(A) = \sqrt{\frac{\max[\mathrm{eig}(A^\dagger A)]}{\min[\mathrm{eig}(A^\dagger A)]}}$$

- $\mathrm{eig}(A^\dagger A)$ returns the eigenvalues of $A^\dagger A$

# Tomographic stability

## Atkinson's inequality

$$\frac{1}{\kappa(A)}\frac{\|\delta b\|}{\|b\|} \leq \frac{\|\delta x\|}{\|x\|} \leq \kappa(A)\frac{\|\delta b\|}{\|b\|}$$




K. E. Atkinson, *An Introduction to Numerical Analysis* (Wiley, New York, 1989).

# Error analysis

## Modified Atkinson's inequality

$$\frac{1}{\kappa(A)}\frac{\|\delta b\|}{\|b+\delta b\|} \leq \frac{\|\delta x\|}{\|x+\delta x\|} \leq \kappa(A)\frac{\|\delta b\|}{\|b+\delta b\|}.$$

This follows directly from linearity of the inversion problem.




K. Bartkiewicz, A. Černoch, K. Lemr, A. Miranowicz, arXiv:1506.01317

# Error analysis

## Modified Atkinson's inequality

$$\frac{1}{\kappa(A)}\frac{\|\delta b\|}{\|b+\delta b\|} \leq \frac{\|\delta x\|}{\|x+\delta x\|} \leq \kappa(A)\frac{\|\delta b\|}{\|b+\delta b\|}.$$

This follows directly from linearity of the inversion problem.




K. Bartkiewicz, A. Černoch, K. Lemr, A. Miranowicz, arXiv:1506.01317

# Error analysis

## Implications of Atkinson's inequality

$$\frac{kR}{4\sqrt{d}\kappa^2(A)} \leq E \leq \frac{kR}{2\sqrt{2}}$$

- State dimension $d = 4$
- Error $E \equiv T[\rho(x), \rho(x+\delta x)] = \frac{1}{2}\mathrm{Tr}\sqrt{(\delta\rho)^2}$
- $0 \leq k := \|\delta b\|/\|\sigma(b)\| \leq 2\sqrt{2}$ for the Poissonian statistics

The distance between a physical state $\rho$ and its tomographic estimate $\rho + \delta\rho$ is limited!

# Error analysis

## Implications of Atkinson's inequality

$$\frac{kR}{4\sqrt{d}\kappa^2(A)} \leq E \leq \frac{kR}{2\sqrt{2}}$$

- State dimension $d = 4$
- Error $E \equiv T[\rho(x), \rho(x+\delta x)] = \frac{1}{2}\mathrm{Tr}\sqrt{(\delta\rho)^2}$
- $0 \leq k := \|\delta b\|/\|\sigma(b)\| \leq 2\sqrt{2}$ for the Poissonian statistics

The distance between a physical state $\rho$ and its tomographic estimate $\rho + \delta\rho$ is limited!

# Error analysis

## Maximum error

$$E_{\max} \leq R \equiv 2\sqrt{d}\,\kappa(A)\,\frac{\|\sigma(b)\|\|x+\delta x\|}{\|b+\delta b\|}$$

- know your $\kappa(A)$ and state dimension $d = 4$
- measure $b + \delta b$ and estimate $\sigma(b)$
- calculate $x + \delta x = A^{-1}(b + \delta b)$

The limit on **maximum error** is $\rho$ independent!

# Error analysis

## Maximum error

$$E_{\max} \leq R \equiv 2\sqrt{d}\,\kappa(A)\,\frac{\|\sigma(b)\|\|x+\delta x\|}{\|b+\delta b\|}$$

- know your $\kappa(A)$ and state dimension $d = 4$
- measure $b + \delta b$ and estimate $\sigma(b)$
- calculate $x + \delta x = A^{-1}(b + \delta b)$

The limit on **maximum error** is $\rho$ independent!

# Error analysis

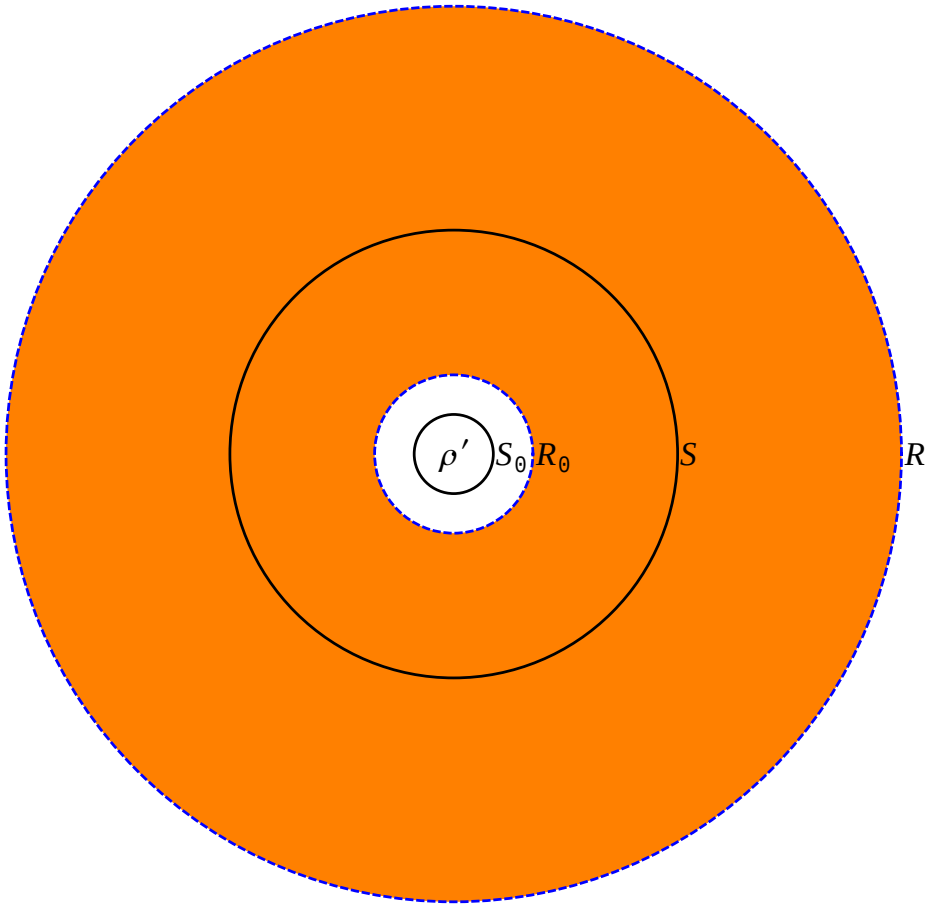


## Uncertainty disk

- $\rho' = \rho + \delta\rho$
- $R_0 = \frac{R}{\sqrt{2d}\kappa^2(A)}$
- $R = 2\sqrt{d}\,\kappa(A)\,\frac{\|\sigma(b)\|\|x+\delta x\|}{\|b+\delta b\|}$

The physical state $\rho$ is located on a disk of radius between $R_0$ and $R$.

The size of uncertainty disc is limited by $R$.

# Error analysis

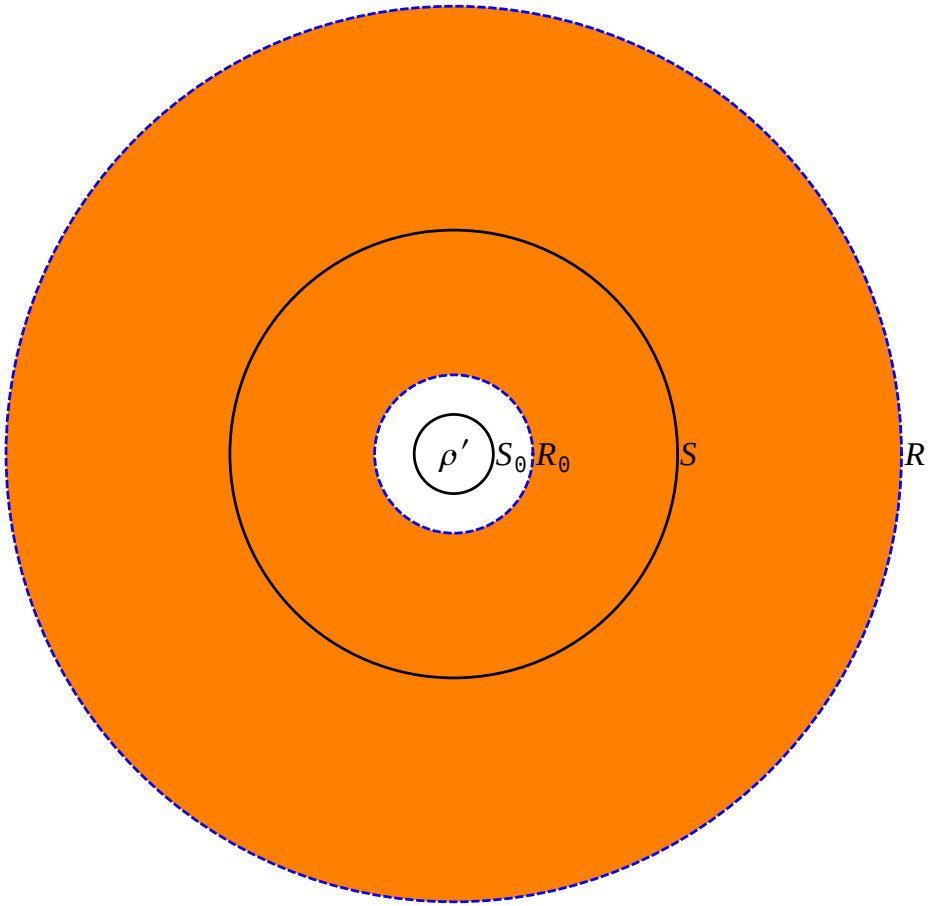


## Uncertainty disk

- $\rho' = \rho + \delta\rho$
- $R_0 = \frac{R}{\sqrt{2d}\kappa^2(A)}$
- $R = 2\sqrt{d}\,\kappa(A)\,\frac{\|\sigma(b)\|\|x+\delta x\|}{\|b+\delta b\|}$

The physical state $\rho$ is located on a disk of radius between $R_0$ and $R$.

The size of uncertainty disc is limited by $R$.

# Error analysis

## Standard error

$$E_{\text{standard}} \leq \sqrt{\frac{d}{2}}\,\kappa(A)\,\frac{\|\sigma(b)\|\|x+\delta x\|}{\|b+\delta b\|} = \frac{R}{2\sqrt{2}}$$

- if $k = 1$ the deviations $\|\delta b\| \to \|\sigma(b)\|$

The limit on **standard error** is $\rho$ independent!

# Error analysis

## The most probable range of errors

$$\frac{kR}{4\sqrt{d}\kappa^2(A)} \leq E \leq \frac{kR}{2\sqrt{2}}$$

- Chebyshev's inequality: $1 - 1/k^2 \leq \Pr(E \leq kR/2\sqrt{2})$
- Let $S = R/2$, then

$$\Pr\left(0 \leq E \leq S\right) \geq \frac{1}{2}$$

The Chebyshev's inequality holds if $R/2\sqrt{2}$ is a good estimate of $E_{\text{standard}}$, but also if $E_{\text{standard}} \leq R/2\sqrt{2}$ (it is the case!).

# Error analysis

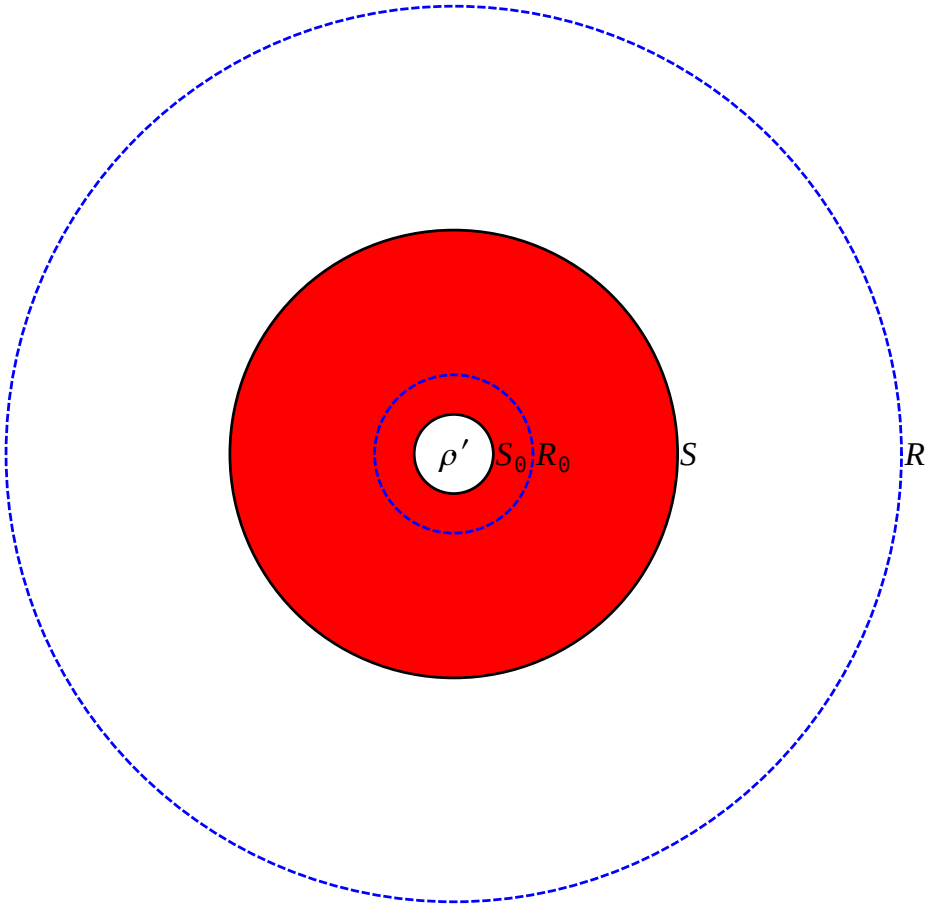


## Standard error

- $\rho' = \rho + \delta\rho$
- $S = \sqrt{d}\,\kappa(A)\,\frac{\|\sigma(b)\|\|x+\delta x\|}{\|b+\delta b\|}$
- $S_0 = \frac{S}{\sqrt{2d}\kappa^2(A)}$

With probability $> 1/2$ the physical state $\rho$ is located on a disk of radius between $S_0$ and $S$.

# Error analysis

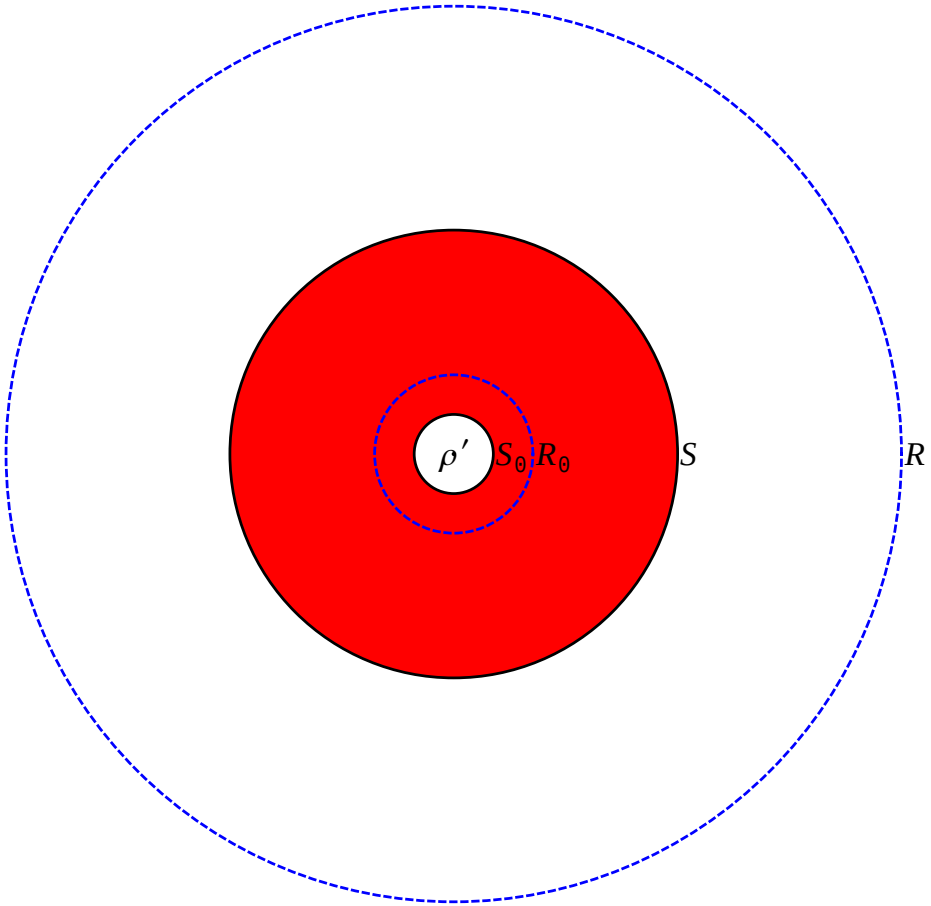


## Standard error

- $\rho' = \rho + \delta\rho$
- $S = \sqrt{d}\,\kappa(A)\,\frac{\|\sigma(b)\|\|x+\delta x\|}{\|b+\delta b\|}$
- $S_0 = \frac{S}{\sqrt{2d}\kappa^2(A)}$

With probability $> 1/2$ the physical state $\rho$ is located on a disk of radius between $S_0$ and $S$.

# Error analysis

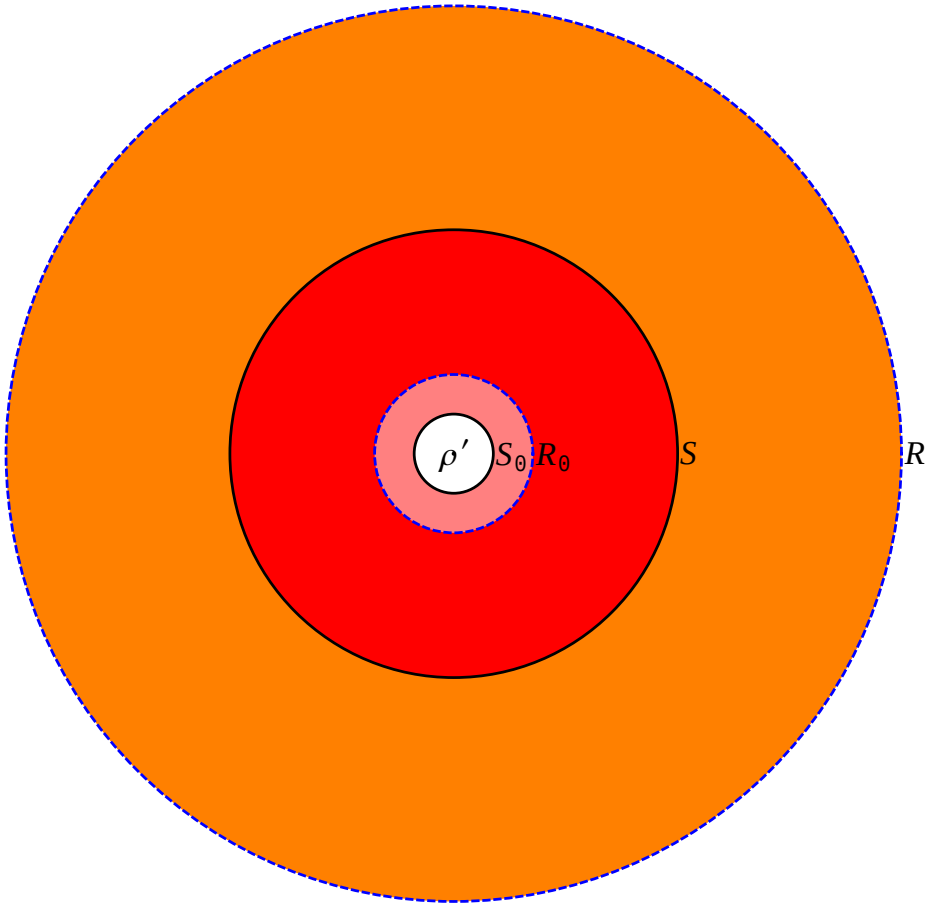


## Error estimation

- $\rho' = \rho + \delta\rho$
- $R = 2\sqrt{d}\,\kappa(A)\,\frac{\|\sigma(b)\|\|x+\delta x\|}{\|b+\delta b\|}$
- $R_0 = \frac{R}{\sqrt{2d}\kappa^2(A)}$
- $S = R/2$
- $S_0 = R_0/2$

$R$ or $S \propto \kappa(A)$ appear to be a good indicators of error robustness.

# Error analysis

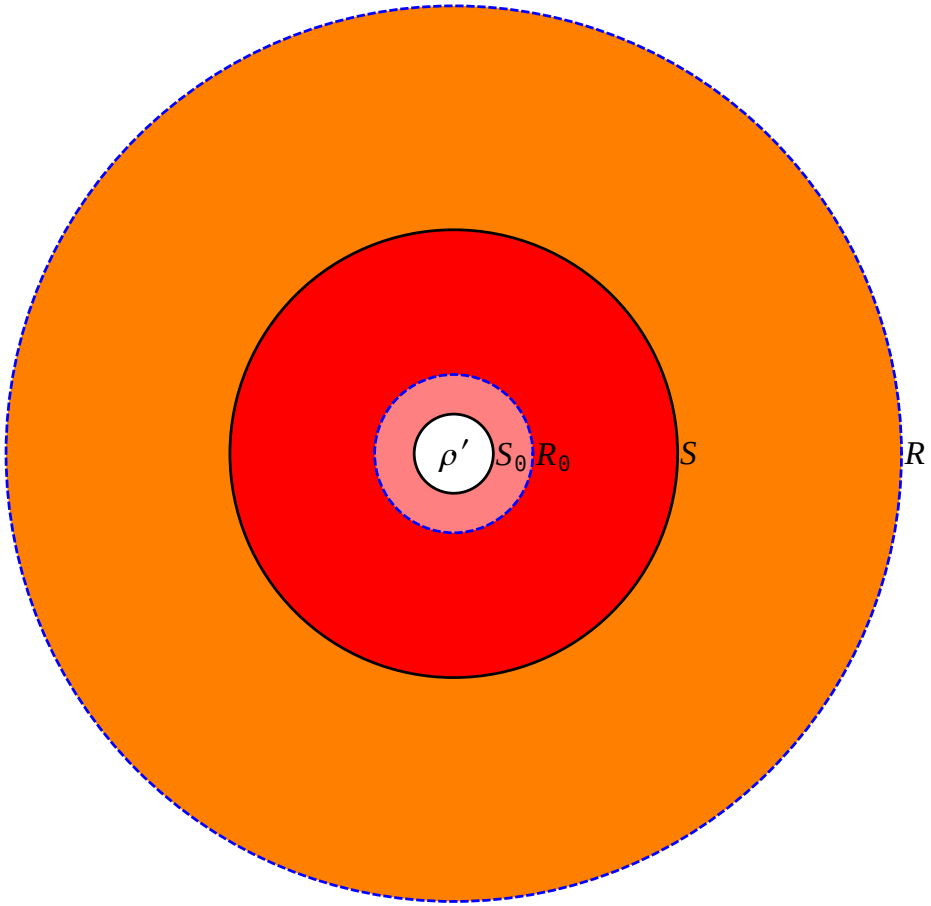


## Error estimation

- $\rho' = \rho + \delta\rho$
- $R = 2\sqrt{d}\,\kappa(A)\,\frac{\|\sigma(b)\|\|x+\delta x\|}{\|b+\delta b\|}$
- $R_0 = \frac{R}{\sqrt{2d}\kappa^2(A)}$
- $S = R/2$
- $S_0 = R_0/2$

$R$ or $S \propto \kappa(A)$ appear to be a good indicators of error robustness.

# Optimal tomography

## Overview of tomographies

- $\kappa(A) = 1$ Optimal tomography: 16 measurements
- $\kappa(A) = \sqrt{2}$ Pauli matrices: 16 measurements
- $\kappa(A) = \sqrt{5}$ MUB tomography: 20 measurements
- $\kappa(A) = \sqrt{9}$ Standard tomography: 36 measurements
- $\kappa(A) = \sqrt{60.1}$ [James *et al.*, 2001]: 16 measurements




A. Miranowicz, K. Bartkiewicz, J. Peřina Jr., M. Koashi, N. Imoto, F. Nori, Phys. Rev. A **90**, 062123 (2014).




K. Bartkiewicz, A. Černoch, K. Lemr, A. Miranowicz, arXiv:1506.01317

$$R \propto \kappa(A)$$

# Optimal tomography

## Overview of tomographies

- $\kappa(A) = 1$ Optimal tomography: 16 measurements
- $\kappa(A) = \sqrt{2}$ Pauli matrices: 16 measurements
- $\kappa(A) = \sqrt{5}$ MUB tomography: 20 measurements
- $\kappa(A) = \sqrt{9}$ Standard tomography: 36 measurements
- $\kappa(A) = \sqrt{60.1}$ [James *et al.*, 2001]: 16 measurements




A. Miranowicz, K. Bartkiewicz, J. Peřina Jr., M. Koashi, N. Imoto, F. Nori, Phys. Rev. A **90**, 062123 (2014).




K. Bartkiewicz, A. Černoch, K. Lemr, A. Miranowicz, arXiv:1506.01317

$R \propto \kappa(A)$

# Optimal tomography

## Overview of tomographies

- $\kappa(A) = 1$ Optimal tomography: 16 measurements
- $\kappa(A) = \sqrt{2}$ Pauli matrices: 16 measurements
- $\kappa(A) = \sqrt{5}$ MUB tomography: 20 measurements
- $\kappa(A) = \sqrt{9}$ Standard tomography: 36 measurements
- $\kappa(A) = \sqrt{60.1}$ [James *et al.*, 2001]: 16 measurements




A. Miranowicz, K. Bartkiewicz, J. Peřina Jr., M. Koashi, N. Imoto, F. Nori, Phys. Rev. A **90**, 062123 (2014).




K. Bartkiewicz, A. Černoch, K. Lemr, A. Miranowicz, arXiv:1506.01317

$$R \propto \kappa(A)$$

# Optimal tomography

## Overview of tomographies

- $\kappa(A) = 1$ Optimal tomography: 16 measurements
- $\kappa(A) = \sqrt{2}$ Pauli matrices: 16 measurements
- $\kappa(A) = \sqrt{5}$ MUB tomography: 20 measurements
- $\kappa(A) = \sqrt{9}$ Standard tomography: 36 measurements
- $\kappa(A) = \sqrt{60.1}$ [James *et al.*, 2001]: 16 measurements




R. B. A. Adamson and A. M. Steinberg, Phys. Rev. Lett. **105**, 030406 (2010).

$$R \propto \kappa(A)$$

# Optimal tomography

## Overview of tomographies

- $\kappa(A) = 1$ Optimal tomography: 16 measurements
- $\kappa(A) = \sqrt{2}$ Pauli matrices: 16 measurements
- $\kappa(A) = \sqrt{5}$ MUB tomography: 20 measurements
- $\kappa(A) = \sqrt{9}$ Standard tomography: 36 measurements
- $\kappa(A) = \sqrt{60.1}$ [James *et al.*, 2001]: 16 measurements




J. B. Altepeter, E. R. Jeffrey, and P. G. Kwiat, Advances in Atomic, Molecular, and Optical Physics **52**, 105 (2005).

$$R \propto \kappa(A)$$

# Optimal tomography

## Overview of tomographies

- $\kappa(A) = 1$ Optimal tomography: 16 measurements
- $\kappa(A) = \sqrt{2}$ Pauli matrices: 16 measurements
- $\kappa(A) = \sqrt{5}$ MUB tomography: 20 measurements
- $\kappa(A) = \sqrt{9}$ Standard tomography: 36 measurements
- $\kappa(A) = \sqrt{60.1}$ [James *et al.*, 2001]: 16 measurements




D. F. V. James, P. G. Kwiat, W. J. Munro, and A. G. White, Phys. Rev. A **64**, 052312 (2001).

$$R \propto \kappa(A)$$

# Optimal tomography

## Matrix $A$

$$A^T = \begin{bmatrix}
1 & 0 & 0 & 0 & 0 & 0 & 0 & 0 & 0 & 0 & 0 & 0 & 0 & 0 & 0 & 0 \\
0 & 0 & 0 & 0 & 0 & 0 & 0 & 1 & 0 & 0 & 0 & 0 & 0 & 0 & 0 & 0 \\
0 & 0 & 0 & 0 & 0 & 0 & 0 & 0 & 0 & 0 & 0 & 0 & 1 & 0 & 0 & 0 \\
0 & 0 & 0 & 0 & 0 & 0 & 0 & 0 & 0 & 0 & 0 & 0 & 0 & 0 & 0 & 1 \\
0 & 1 & 0 & 0 & 0 & 0 & 0 & 0 & 0 & 0 & 0 & 0 & 0 & 0 & 0 & 0 \\
0 & 0 & -1 & 0 & 0 & 0 & 0 & 0 & 0 & 0 & 0 & 0 & 0 & 0 & 0 & 0 \\
0 & 0 & 0 & 1 & 0 & 0 & 0 & 0 & 0 & 0 & 0 & 0 & 0 & 0 & 0 & 0 \\
0 & 0 & 0 & 0 & -1 & 0 & 0 & 0 & 0 & 0 & 0 & 0 & 0 & 0 & 0 & 0 \\
0 & 0 & 0 & 0 & 0 & 0 & 0 & 0 & 0 & 0 & 0 & 0 & 0 & 1 & 0 & 0 \\
0 & 0 & 0 & 0 & 0 & 0 & 0 & 0 & 0 & 0 & 0 & 0 & 0 & 0 & -1 & 0 \\
0 & 0 & 0 & 0 & 0 & 0 & 0 & 0 & 0 & 0 & 1 & 0 & 0 & 0 & 0 & 0 \\
0 & 0 & 0 & 0 & 0 & 0 & 0 & 0 & 0 & 0 & 0 & -1 & 0 & 0 & 0 & 0 \\
0 & 0 & 0 & 0 & 0 & 0 & 0 & 0 & 1 & 0 & 0 & 0 & 0 & 0 & 0 & 0 \\
0 & 0 & 0 & 0 & 0 & 0 & 0 & 0 & 0 & -1 & 0 & 0 & 0 & 0 & 0 & 0 \\
0 & 0 & 0 & 0 & 0 & 1 & 0 & 0 & 0 & 0 & 0 & 0 & 0 & 0 & 0 & 0 \\
0 & 0 & 0 & 0 & 0 & 0 & -1 & 0 & 0 & 0 & 0 & 0 & 0 & 0 & 0 & 0
\end{bmatrix}$$

# Optimal tomography

## Separable (local) observables

$$
\begin{aligned}
b_1 &\triangleq |HH\rangle\langle HH|, & b_2 &\triangleq |HV\rangle\langle HV|,\\
b_3 &\triangleq |VH\rangle\langle VH|, & b_4 &\triangleq |VV\rangle\langle VV|,\\
b_5 &\triangleq \frac{1}{2}|H\rangle\langle H|\otimes\sigma_1, & b_6 &\triangleq \frac{1}{2}|H\rangle\langle H|\otimes\sigma_2,\\
b_7 &\triangleq \frac{1}{2}\sigma_1\otimes|H\rangle\langle H|, & b_8 &\triangleq \frac{1}{2}\sigma_2\otimes|H\rangle\langle H|,\\
b_9 &\triangleq \frac{1}{2}|V\rangle\langle V|\otimes\sigma_1, & b_{10} &\triangleq \frac{1}{2}|V\rangle\langle V|\otimes\sigma_2,\\
b_{11} &\triangleq \frac{1}{2}\sigma_1\otimes|V\rangle\langle V|, & b_{12} &\triangleq \frac{1}{2}\sigma_2\otimes|V\rangle\langle V|\ldots
\end{aligned}
$$

Pauli matrices: $\sigma_1 = |D\rangle\langle D| - |A\rangle\langle A|, \sigma_2 = |L\rangle\langle L| - |R\rangle\langle R|$

# Optimal tomography

## Separable (local) observables

$$
\begin{aligned}
b_1 &\triangleq |HH\rangle\langle HH|, & b_2 &\triangleq |HV\rangle\langle HV|,\\
b_3 &\triangleq |VH\rangle\langle VH|, & b_4 &\triangleq |VV\rangle\langle VV|,\\
b_5 &\triangleq \frac{1}{2}|H\rangle\langle H|\otimes\sigma_1, & b_6 &\triangleq \frac{1}{2}|H\rangle\langle H|\otimes\sigma_2,\\
b_7 &\triangleq \frac{1}{2}\sigma_1\otimes|H\rangle\langle H|, & b_8 &\triangleq \frac{1}{2}\sigma_2\otimes|H\rangle\langle H|,\\
b_9 &\triangleq \frac{1}{2}|V\rangle\langle V|\otimes\sigma_1, & b_{10} &\triangleq \frac{1}{2}|V\rangle\langle V|\otimes\sigma_2,\\
b_{11} &\triangleq \frac{1}{2}\sigma_1\otimes|V\rangle\langle V|, & b_{12} &\triangleq \frac{1}{2}\sigma_2\otimes|V\rangle\langle V|\ldots
\end{aligned}
$$

Pauli matrices: $\sigma_1 = |D\rangle\langle D| - |A\rangle\langle A|, \sigma_2 = |L\rangle\langle L| - |R\rangle\langle R|$

# Optimal tomography

## Global observables

$$
\begin{aligned}
b_{13} &\triangleq \tfrac{1}{2}(|\Psi^+\rangle\langle\Psi^+| - |\Psi^-\rangle\langle\Psi^-|),\\
b_{14} &\triangleq \tfrac{1}{2}(|\bar{\Psi}^+\rangle\langle\bar{\Psi}^+| - |\bar{\Psi}^-\rangle\langle\bar{\Psi}^-|),\\
b_{15} &\triangleq \tfrac{1}{2}(|\Phi^+\rangle\langle\Phi^+| - |\Phi^-\rangle\langle\Phi^-|),\\
b_{16} &\triangleq \tfrac{1}{2}(|\bar{\Phi}^+\rangle\langle\bar{\Phi}^+| - |\bar{\Phi}^-\rangle\langle\bar{\Phi}^-|).
\end{aligned}
$$

Entangled states $|\Phi^\pm\rangle = (|HH\rangle \pm |VV\rangle)/\sqrt{2}$, $|\Psi^\pm\rangle = (|HV\rangle \pm |VH\rangle)/\sqrt{2}$, $|\bar{\Phi}^\pm\rangle = (|HH\rangle \pm i|VV\rangle)/\sqrt{2}$, $|\bar{\Psi}^\pm\rangle = (|HV\rangle \pm i|VH\rangle)/\sqrt{2}$ can be transformed into each other by local transformations. It is enough to have a singlet $|\Psi^-\rangle$ detector!

For composite measurements $b$ is given by the Skellam distribution.

# Optimal tomography

## Global observables

$$
\begin{aligned}
b_{13} &\triangleq \tfrac{1}{2}(|\Psi^+\rangle\langle\Psi^+| - |\Psi^-\rangle\langle\Psi^-|),\\
b_{14} &\triangleq \tfrac{1}{2}(|\bar{\Psi}^+\rangle\langle\bar{\Psi}^+| - |\bar{\Psi}^-\rangle\langle\bar{\Psi}^-|),\\
b_{15} &\triangleq \tfrac{1}{2}(|\Phi^+\rangle\langle\Phi^+| - |\Phi^-\rangle\langle\Phi^-|),\\
b_{16} &\triangleq \tfrac{1}{2}(|\bar{\Phi}^+\rangle\langle\bar{\Phi}^+| - |\bar{\Phi}^-\rangle\langle\bar{\Phi}^-|).
\end{aligned}
$$

Entangled states $|\Phi^{\pm}\rangle = (|HH\rangle \pm |VV\rangle)/\sqrt{2}$, $|\Psi^{\pm}\rangle = (|HV\rangle \pm |VH\rangle)/\sqrt{2}$, $|\bar{\Phi}^{\pm}\rangle = (|HH\rangle \pm i|VV\rangle)/\sqrt{2}$, $|\bar{\Psi}^{\pm}\rangle = (|HV\rangle \pm i|VH\rangle)/\sqrt{2}$ can be transformed into each other by local transformations. It is enough to have a singlet $|\Psi^-\rangle$ detector!

For composite measurements $b$ is given by the Skellam distribution.

# Optimal tomography

## Global observables

$$
\begin{aligned}
b_{13} &\triangleq \tfrac{1}{2}(|\Psi^+\rangle\langle\Psi^+| - |\Psi^-\rangle\langle\Psi^-|),\\
b_{14} &\triangleq \tfrac{1}{2}(|\bar{\Psi}^+\rangle\langle\bar{\Psi}^+| - |\bar{\Psi}^-\rangle\langle\bar{\Psi}^-|),\\
b_{15} &\triangleq \tfrac{1}{2}(|\Phi^+\rangle\langle\Phi^+| - |\Phi^-\rangle\langle\Phi^-|),\\
b_{16} &\triangleq \tfrac{1}{2}(|\bar{\Phi}^+\rangle\langle\bar{\Phi}^+| - |\bar{\Phi}^-\rangle\langle\bar{\Phi}^-|).
\end{aligned}
$$

Entangled states $|\Phi^{\pm}\rangle = (|HH\rangle \pm |VV\rangle)/\sqrt{2}$, $|\Psi^{\pm}\rangle = (|HV\rangle \pm |VH\rangle)/\sqrt{2}$, $|\bar{\Phi}^{\pm}\rangle = (|HH\rangle \pm i|VV\rangle)/\sqrt{2}$, $|\bar{\Psi}^{\pm}\rangle = (|HV\rangle \pm i|VH\rangle)/\sqrt{2}$ can be transformed into each other by local transformations. It is enough to have a singlet $|\Psi^-\rangle$ detector!

For composite measurements $b$ is given by the Skellam distribution.

# Experimental two-qubit tomography

## Experimental setup

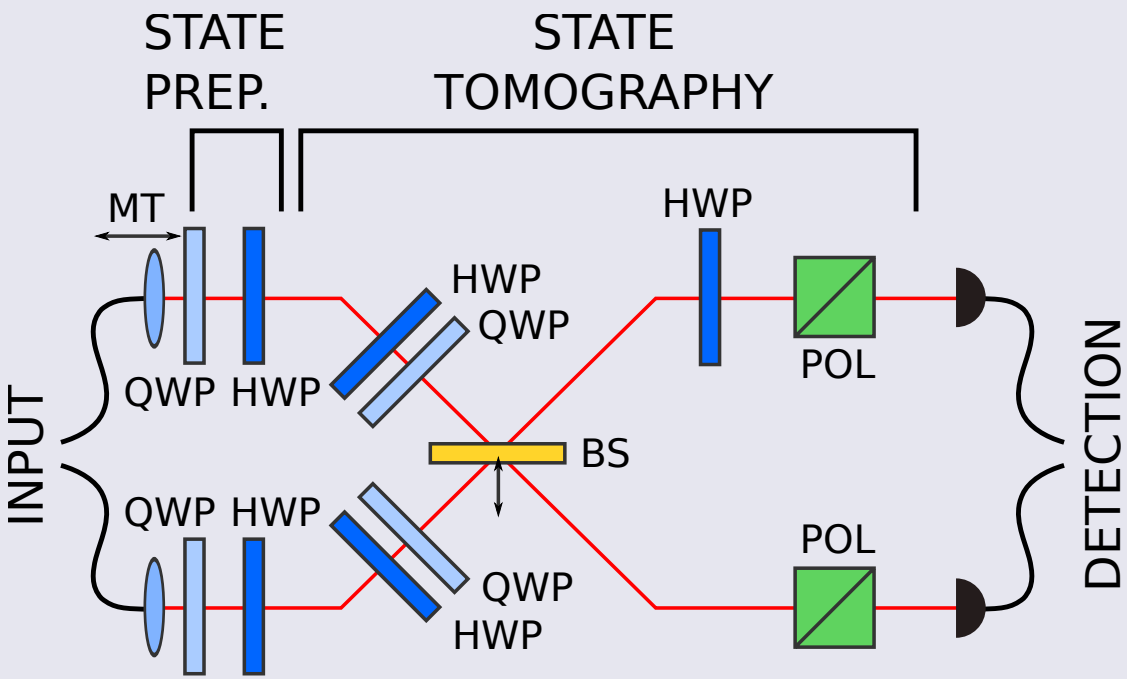


## Detection

- data collection: 5s
- local: BS out
- nonlocal: BS in

Photon pairs were generated by SPDC occurring in a pair of BBO crystals ($2.10^3$ cc. per second for 200 mW pumping @ 355 nm)




K. Bartkiewicz, A. Černoch, K. Lemr, A. Miranowicz, arXiv:1506.01317

# Experimental two-qubit tomography

## Experimental setup

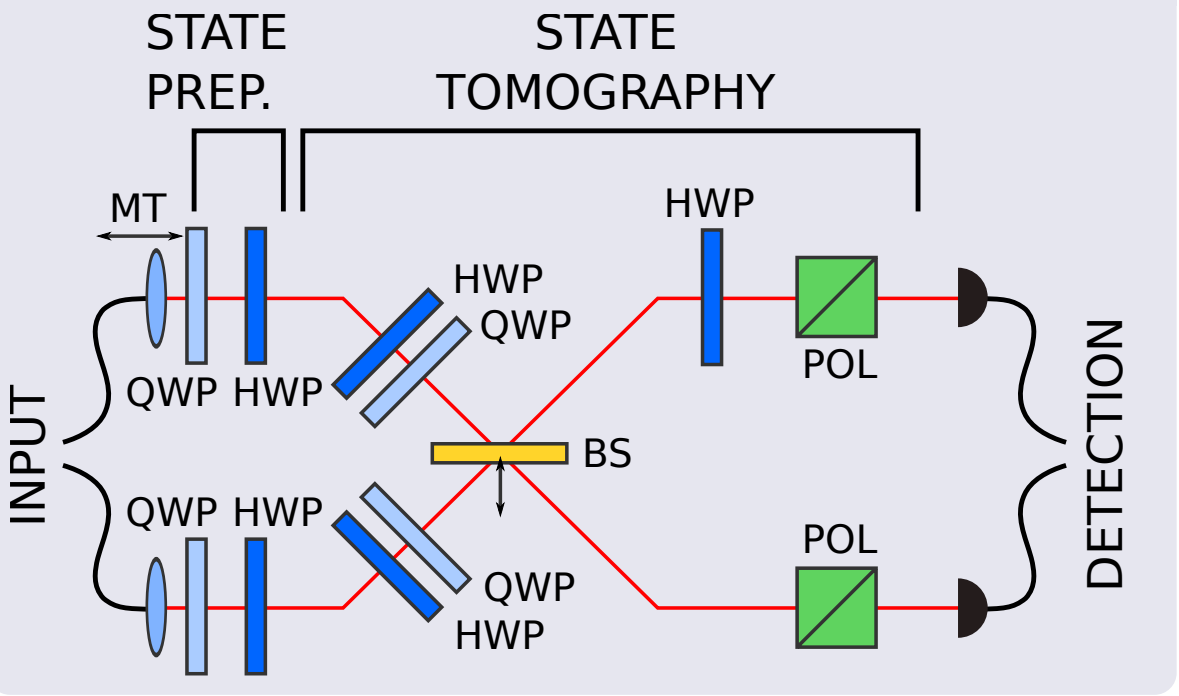


## Detection

- data collection: 5s
- local: BS out
- nonlocal: BS in

Photon pairs were generated by SPDC occurring in a pair of BBO crystals ($2.10^3$ cc. per second for 200 mW pumping @ 355 nm)




K. Bartkiewicz, A. Černoch, K. Lemr, A. Miranowicz, arXiv:1506.01317

# Experimental two-qubit tomography

## Experimental setup

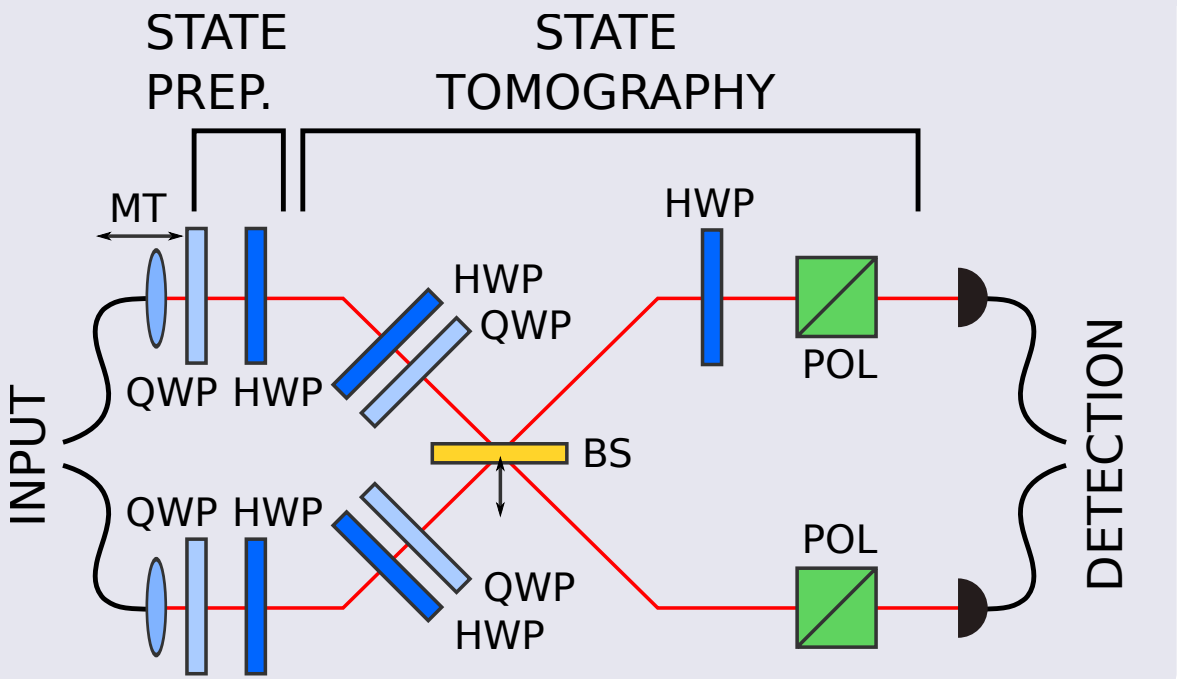


## Detection

- data collection: 5s
- local: BS out
- nonlocal: BS in

Photon pairs were generated by SPDC occurring in a pair of BBO crystals ($2.10^3$ cc. per second for 200 mW pumping @ 355 nm)


K. Bartkiewicz, A. Černoch, K. Lemr, A. Miranowicz, arXiv:1506.01317

# Experimental two-qubit tomography

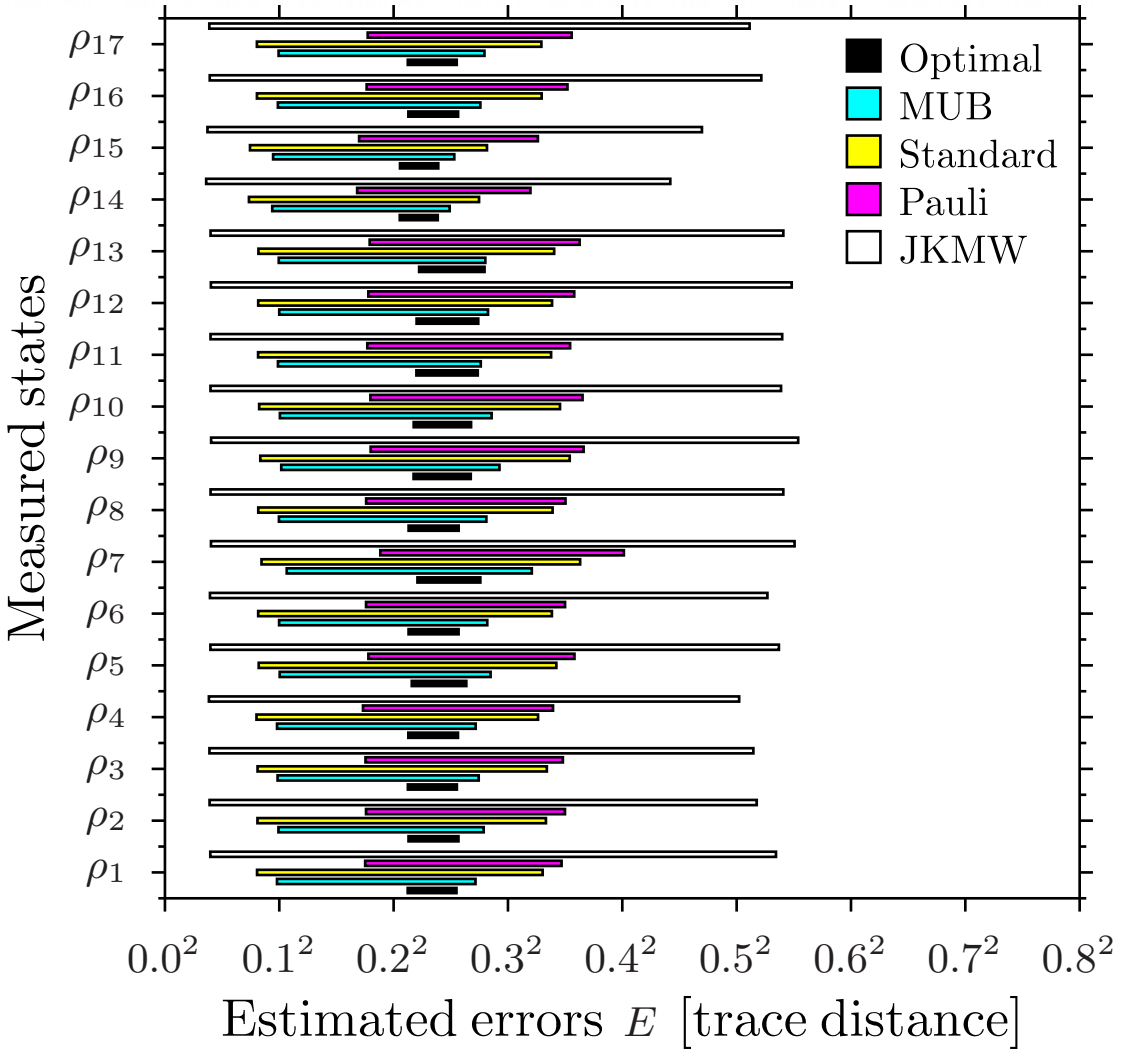


## Standard error

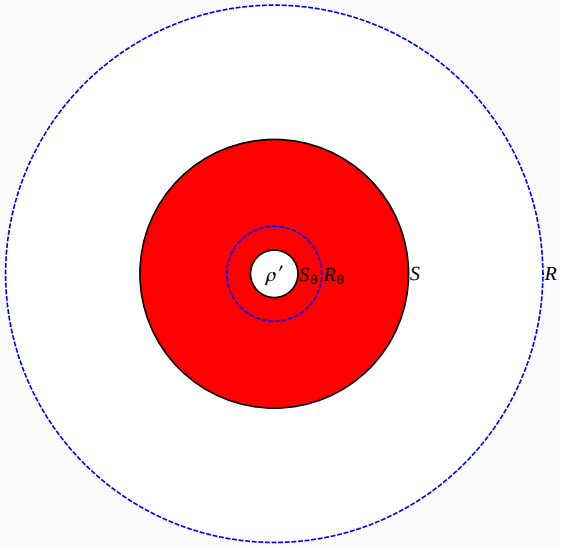


With probability $\geq 1/2$ the physical state $\rho$ is closer to $\rho'$ than the upper limit of a bar.

# Experimental two-qubit tomography

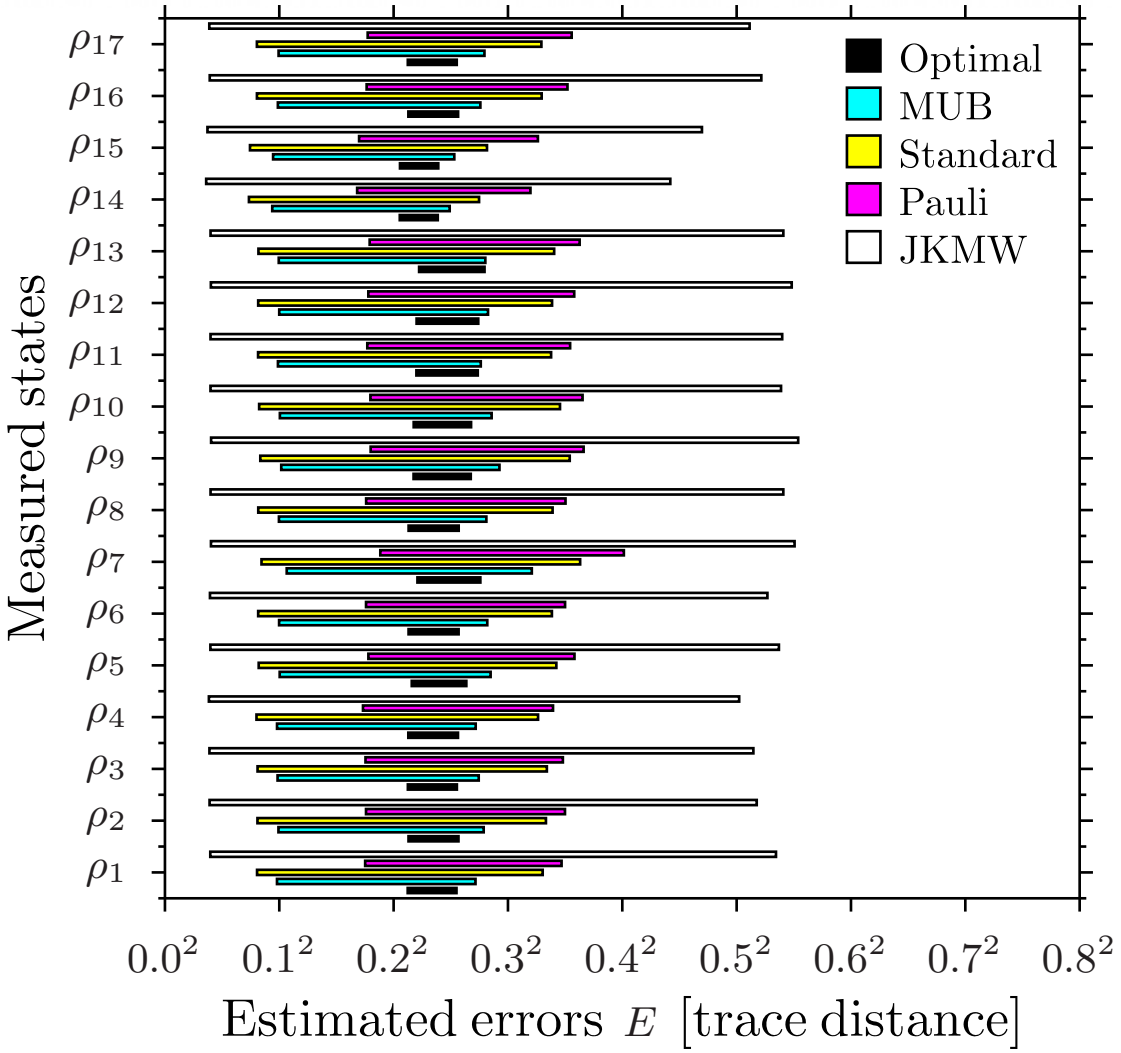


## Standard error

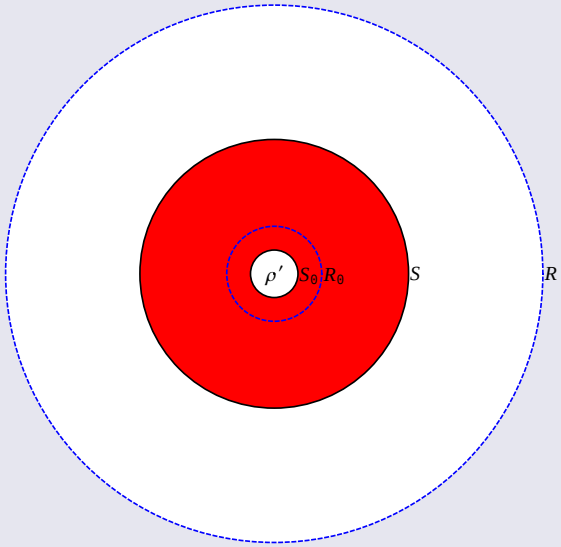


With probability $\geq 1/2$ the physical state $\rho$ is closer to $\rho'$ than the upper limit of a bar.

# Experimental two-qubit tomography

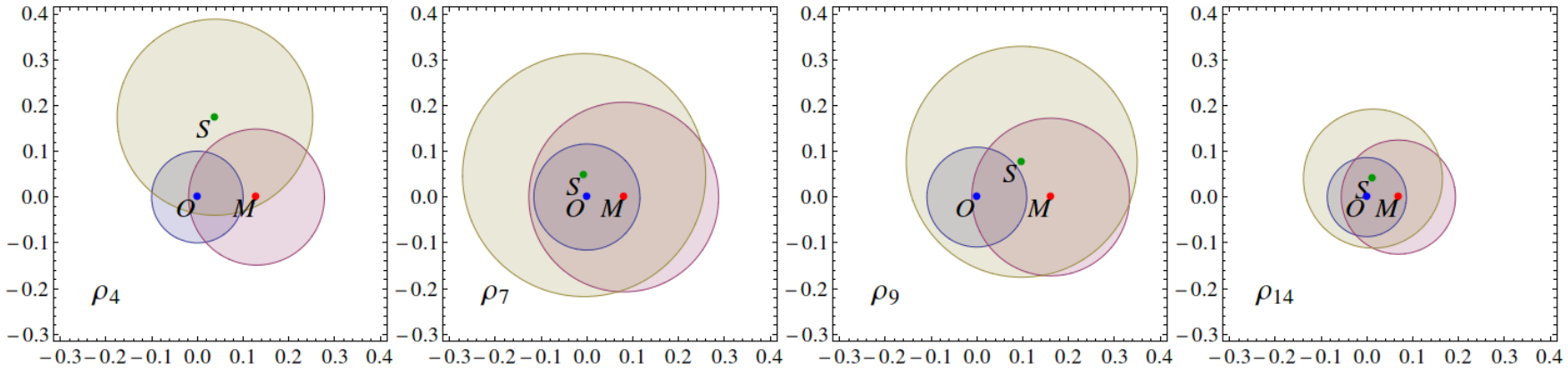


## Relatively placed uncertainty discs

$O$ – optimal, $M$ – MUB, $S$ – standard QST

- centres $\rightarrow$ measured states $\rho'$
- relative positions given by trace distance
- intersections contain the physical states
- intersections are closest to $O$

# Experimental two-qubit tomography

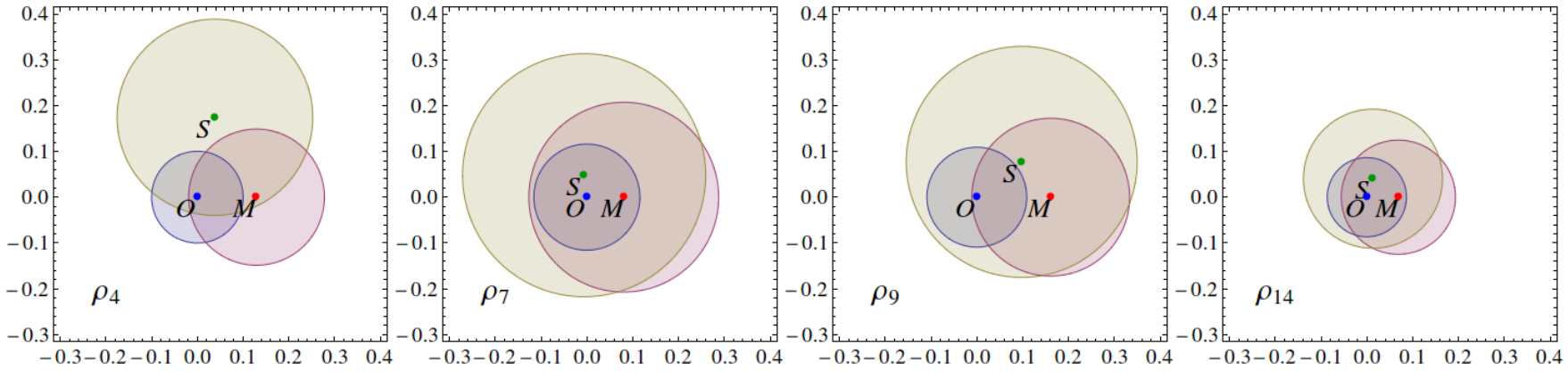


## Relatively placed uncertainty discs

$O$ – optimal, $M$ – MUB, $S$ – standard QST

- centres $\rightarrow$ measured states $\rho'$
- relative positions given by trace distance
- intersections contain the physical states
- intersections are closest to $O$

# Experimental two-qubit tomography

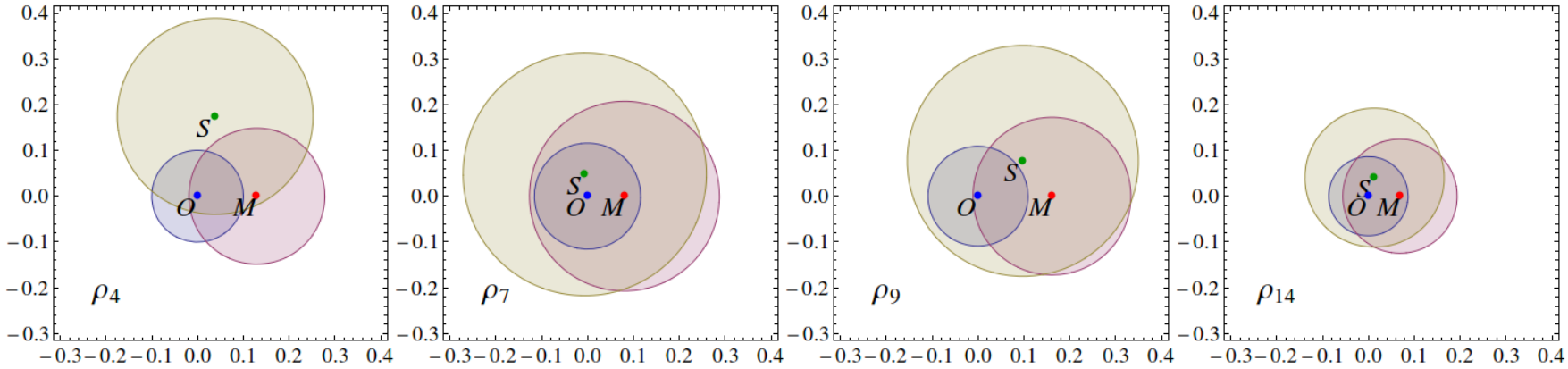


## Representative states

The reconstructed states can be approximated with $\rho_n = |\psi_n\rangle\langle\psi_n|$:

- $|\psi_4\rangle = (|DR\rangle - i|AL\rangle)/\sqrt{2}$
- $|\psi_7\rangle = |HV\rangle$
- $|\psi_9\rangle = (|HV\rangle - |VH\rangle)/\sqrt{2}$
- $|\psi_{14}\rangle = |e_{1a}e_{1b}\rangle$

where $|e_{1a}\rangle = (-0.6556 + 0.6248i)|H\rangle + 0.4241|V\rangle$

and $|e_{1b}\rangle = (-0.1415 - 0.7165i)|H\rangle + 0.6831|V\rangle$.

# Experimental two-qubit tomography

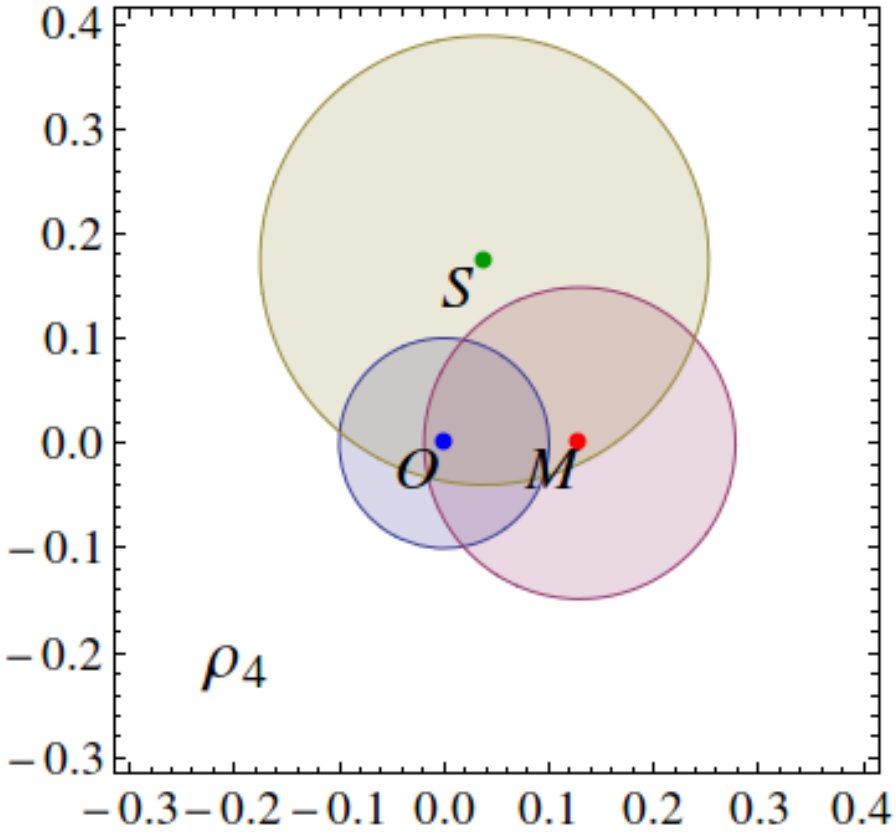


more methods $\rightarrow$ more dimensions for graphical comparison

# Conclusions

- Various QSTs implemented with the same setup
- QST errors estimated without knowing the physical state
- Best error estimates for the optimal QST
- Optimal tomography is the most error robust

# Supported by



NARODOWE CENTRUM NAUKI

Quantum engineering and quantum phase transitions in optical and low-dimensional condensed matter systems

Registry No.:
DEC-2011/03/B/ST2/01903

# Supported by



NARODOWE CENTRUM NAUKI

Nonlinear properties of low dimesional quantum states: direct measurement and applications in quantum information processing

Registry No.:
DEC-2013/11/D/ST2/02638









# Thank you for your attention!




K. Bartkiewicz, A. Černoch, K. Lemr, A. Miranowicz, arXiv:1506.01317




A. Miranowicz, K. Bartkiewicz, J. Peřina Jr., M. Koashi, N. Imoto, F. Nori, Phys. Rev. A **90**, 062123 (2014).

# Uncertainty discs

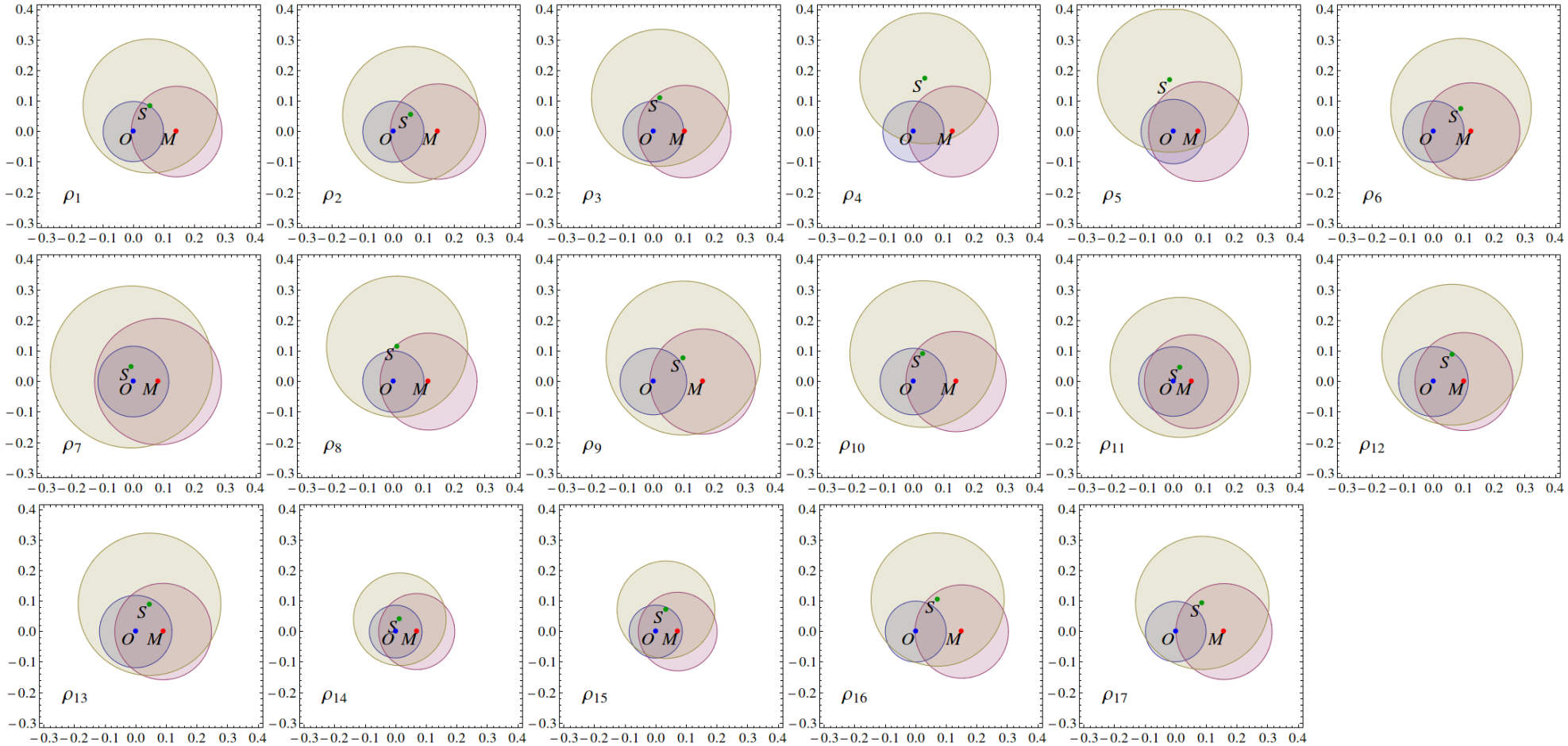

# Measured states

We have prepared 17 different states of high purity, which approximately correspond to:

$$
\begin{aligned}
|\psi_1\rangle &= (|HH\rangle - |VV\rangle)/\sqrt{2}, & |\psi_2\rangle &= (|HH\rangle + |VV\rangle)/\sqrt{2},\\
|\psi_3\rangle &= (|HH\rangle - i|VV\rangle)/\sqrt{2}, & |\psi_4\rangle &= (|DR\rangle - i|AL\rangle)/\sqrt{2},\\
|\psi_5\rangle &= (|HV\rangle + i|VH\rangle)/\sqrt{2}, & |\psi_6\rangle &= (|HV\rangle + |VH\rangle)/\sqrt{2},\\
|\psi_7\rangle &= |HV\rangle, & |\psi_8\rangle &= (|HH\rangle + i|VV\rangle)/\sqrt{2},\\
|\psi_9\rangle &= (|HV\rangle - |VH\rangle)/\sqrt{2}, & |\psi_{10}\rangle &= (|HV\rangle - i|VH\rangle)/\sqrt{2},\\
|\psi_{11}\rangle &= (|DL\rangle + i|AR\rangle)/\sqrt{2}, & |\psi_{12}\rangle &= (|DL\rangle - i|AR\rangle)/\sqrt{2},\\
|\psi_{13}\rangle &= |e_{1a}e_{1b}\rangle, & |\psi_{14}\rangle &= |e_{2a}e_{2b}\rangle,\\
|\psi_{15}\rangle &= 0.79|HV\rangle - 0.61|VH\rangle, & |\psi_{16}\rangle &= 0.50|HV\rangle - 0.87|VH\rangle,\\
& & |\psi_{17}\rangle &= 0.35|HV\rangle - 0.94|VH\rangle;
\end{aligned}
$$

where $|e_{1a}\rangle = (-0.6556 + 0.6248i)|H\rangle + 0.4241|V\rangle$,
$|e_{1b}\rangle = (-0.1415 - 0.7165i)|H\rangle + 0.6831|V\rangle$,
$|e_{2a}\rangle = (-0.9608 + 0.2091i)|H\rangle + 0.1822|V\rangle$,
and $|e_{2b}\rangle = (0.2613 + 0.7338i)|H\rangle + 0.6271|V\rangle$.

# Maximum likelihood estimation

